Job _____ Item No. _____ AIA# _____

GILES FOODSERVICE EQUIPMENT

Giles Heated Merchandiser

Model GHM 8

The **Giles Heated Merchandiser (GHM)** is designed to present maximum menu selections and keep them at the proper serving temperature to preserve freshness and mouth-watering appearance, awaiting your customer's enjoyment.

The **GHM** was developed with flexibility in mind. Food service operators have the option of displaying freshly prepared foods for full service operation, or offering pre-packaged foods for customer self-service. In either case, your products are highly visible and appealing to customers.

Construction

Stainless steel exterior
Stainless steel pan well
Tempered Euro style glass
Safety coated heat lamps

Optional Products and Programs

- Mirrored bronze doors & side glass
- Self serve configuration
- Self serve tile surface
- Base options: consult factory

C UL US LISTED

CLASSIFIED UL SANITATION

Standard Features

- **Controls** - The control panel on the **GHM** is functional and easy to operate. It features dial-type thermostats for the well heaters, adjustable variable controls for heat lamp output, and has indicator lights to verify unit operation.
- **European Style Glass** - Provides customers with maximum product visibility and is equipped with gas-shock springs to hold the glass open for easy cleaning.
- **Temperature Control** - Product wells are thermostatically controlled for rapid response to temperature variations. Once set, there will is no need to adjust temperature due to changes in volume. This feature keeps products hot and fresh at all times.
- **Mounting Options** - All Giles Heated Merchandisers are designed to be mounted on a base or as a stand alone countertop unit.
- **Regulatory** - All Giles equipment is designed and constructed to UL safety and sanitary standards.

Giles Enterprises, Inc.
2750 Gunter Park Drive West • Montgomery, AL 36109 USA
334.272.1457 • Fax 334.239.4117 • **Phone Toll Free: 800.554.4537**
Web Site: www.gfsequipment.com • Email: services@gfsequipment.com

Part # 60331.D Rel Date: 09/00; Rev. 09/08/10

Job _____ Item No. _____ AIA# _____

Giles Heated Merchandiser

Model GHM 8

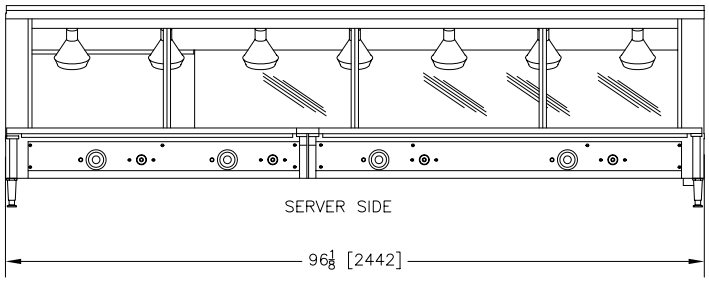

GHM8/2L – 7 WELL

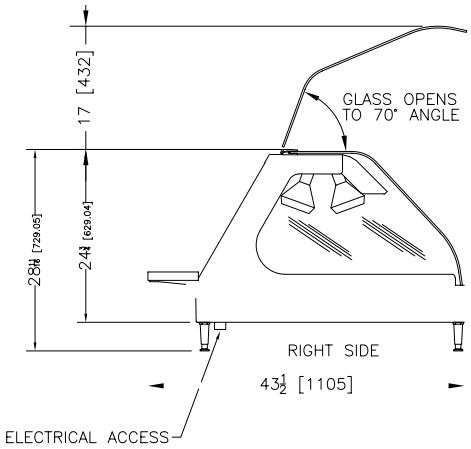

Inches (millimeters

36196.B

Dimensions:
Width: 96 1/8" 2442 mm
Depth: 36 9/16" 929 mm
Height: 24 13/16" 631 mm
*Height dimension noted is with glass closed.

Electrical Specifications:
208/60/1 @ 7140 Watts / 31A
240/60/1 @ 8750 Watts / 35A
380/50/3 @ 8750 Watts / 13A

Thermostats:
Capillary type

Weight:
Shipping Weight: 818 lbs. (372 kg)
Shipping Size: 24 3/16" W x 98 1/8" D x 36 9/16"= 51" cu ft.
63 mm x 2442 mm x 929 mm= 2 cu meters

Accessories:
Fold down HDPE cutting board
Pan dividers

Listings:
UL / UL Canada
UL Sanitation

Bidding Specifications

1. Specify as model GHM 8.
2. Specify full-serve or combination model w/2-ft self-serve
3. From customer view, specify left or right side self-serve section.
4. Specify P/N 66033 and quantity for optional tile inserts.
5. All options may not be available for immediate shipment; please consult factory when ordering.
6. For export consult the factory.
7. FOB: Montgomery, AL 36109

We reserve the right to change specifications and product design without notice. Such revisions do not entitle the buyer to corresponding changes, improvements additions or replacements for previously purchased equipment.

GILES FOODSERVICE EQUIPMENT
2750 Gunter Park Drive West • Montgomery, AL 36109 USA
334.272.1457 • Fax 334.239.4117 • **Phone Toll Free: 800.554.4537**
Web Site: www.gfsequipment.com • Email: services@gfsequipment.com

Part # 60331.D Rel Date: 09/00; Rev. 09/08/10